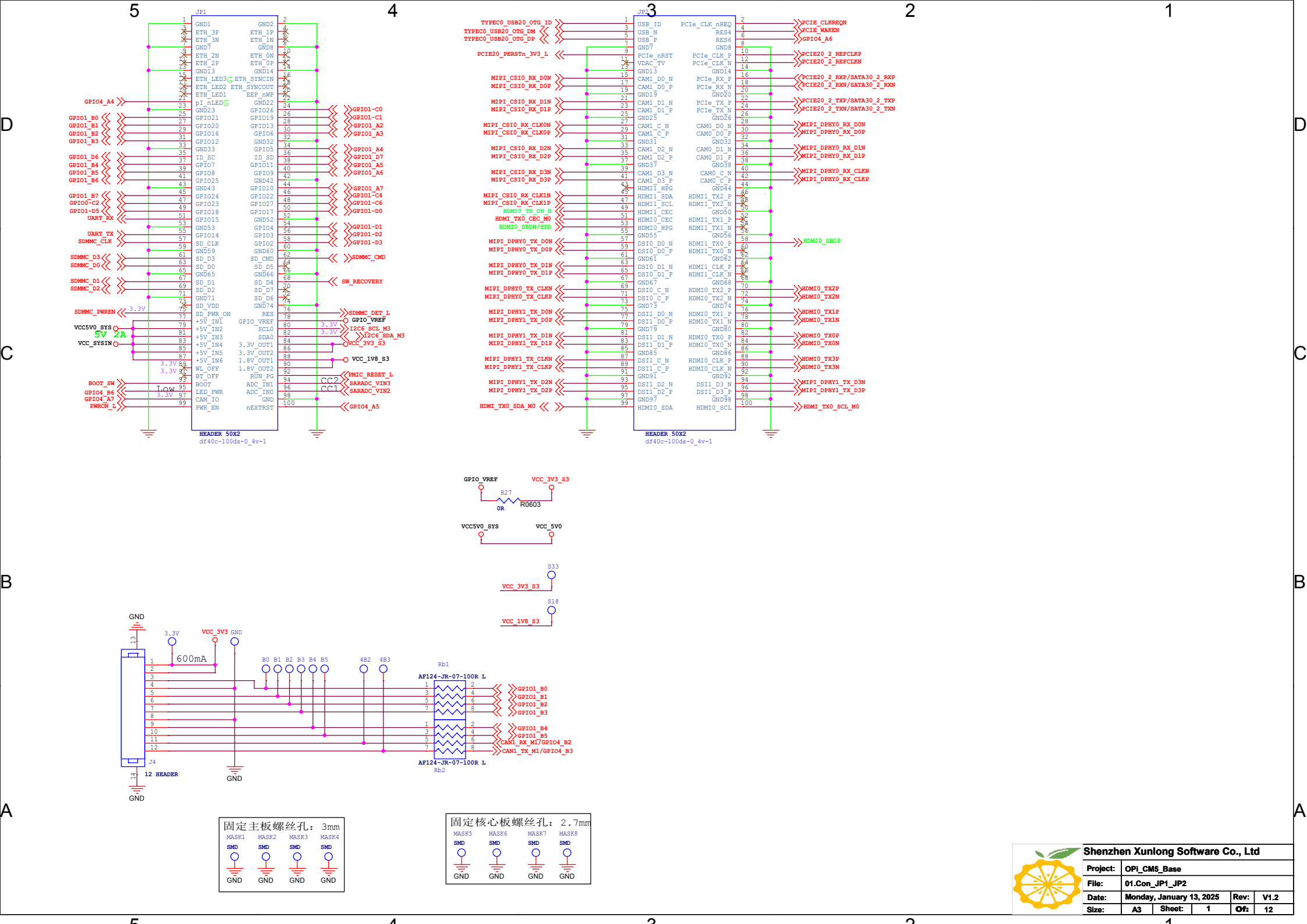


| | | | | |
|---|---|---|---|---|
| Shenzhen Xunlong Software Co., Ltd | | | | |
| Project: | OPi_CM5_Base | | | |
| File: | 01.Con_JP1_JP2 | | | |
| Date: | Monday, January 13, 2025 | | Rev: | V1.2 |
| Size: | A3 | Sheet: 1 | Of: | 12 |

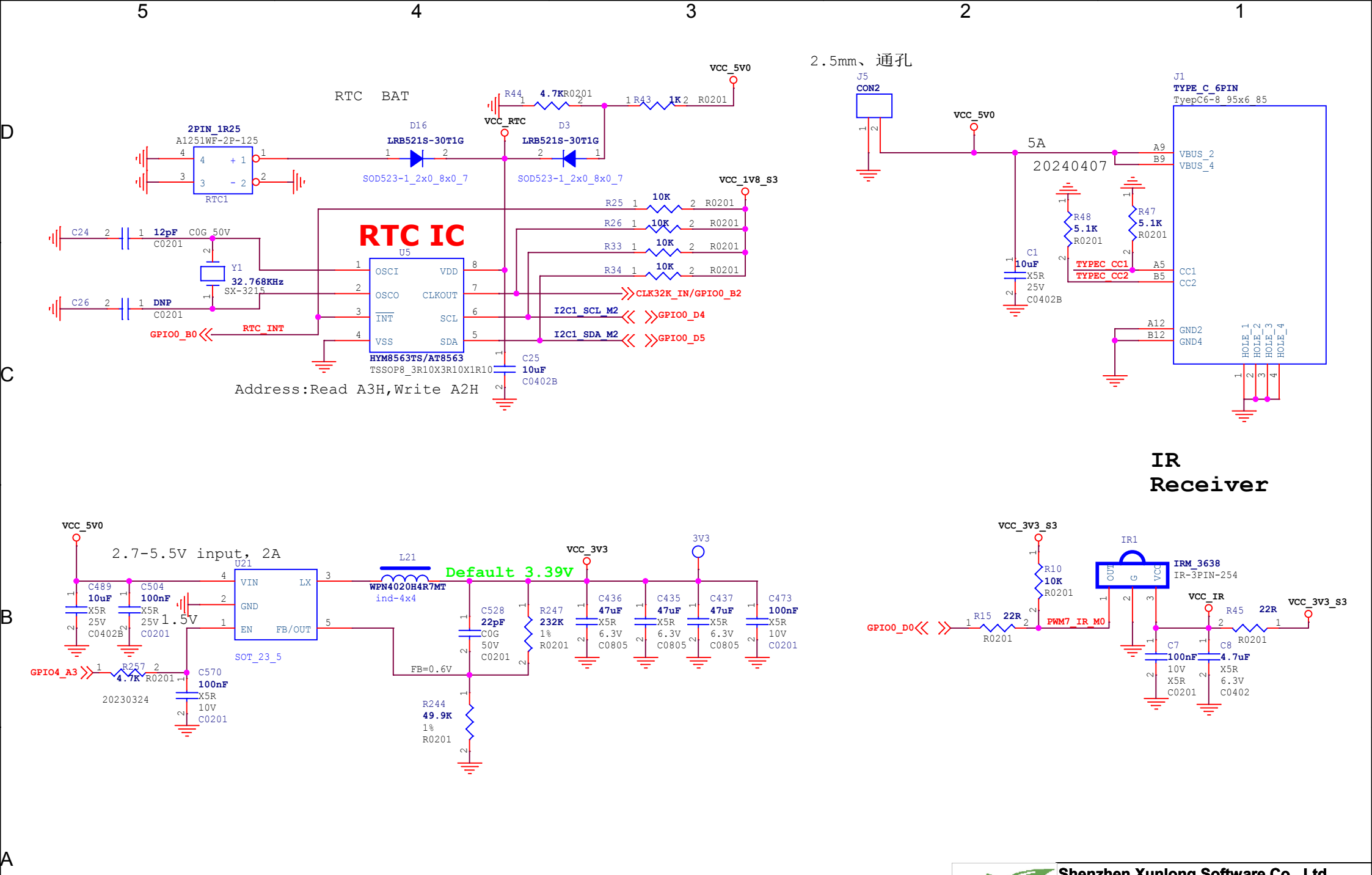


| | | | | |
|---|---|---|---|---|
| Shenzhen Xunlong Software Co., Ltd | | | | |
| Project: | OPi_CM5_Base | | | |
| File: | 02.RTC/IR/5V/3V3 | | | |
| Date: | Monday, January 13, 2025 | | Rev: | V1.2 |
| Size: | A3 | Sheet: 2 | Of: | 12 |

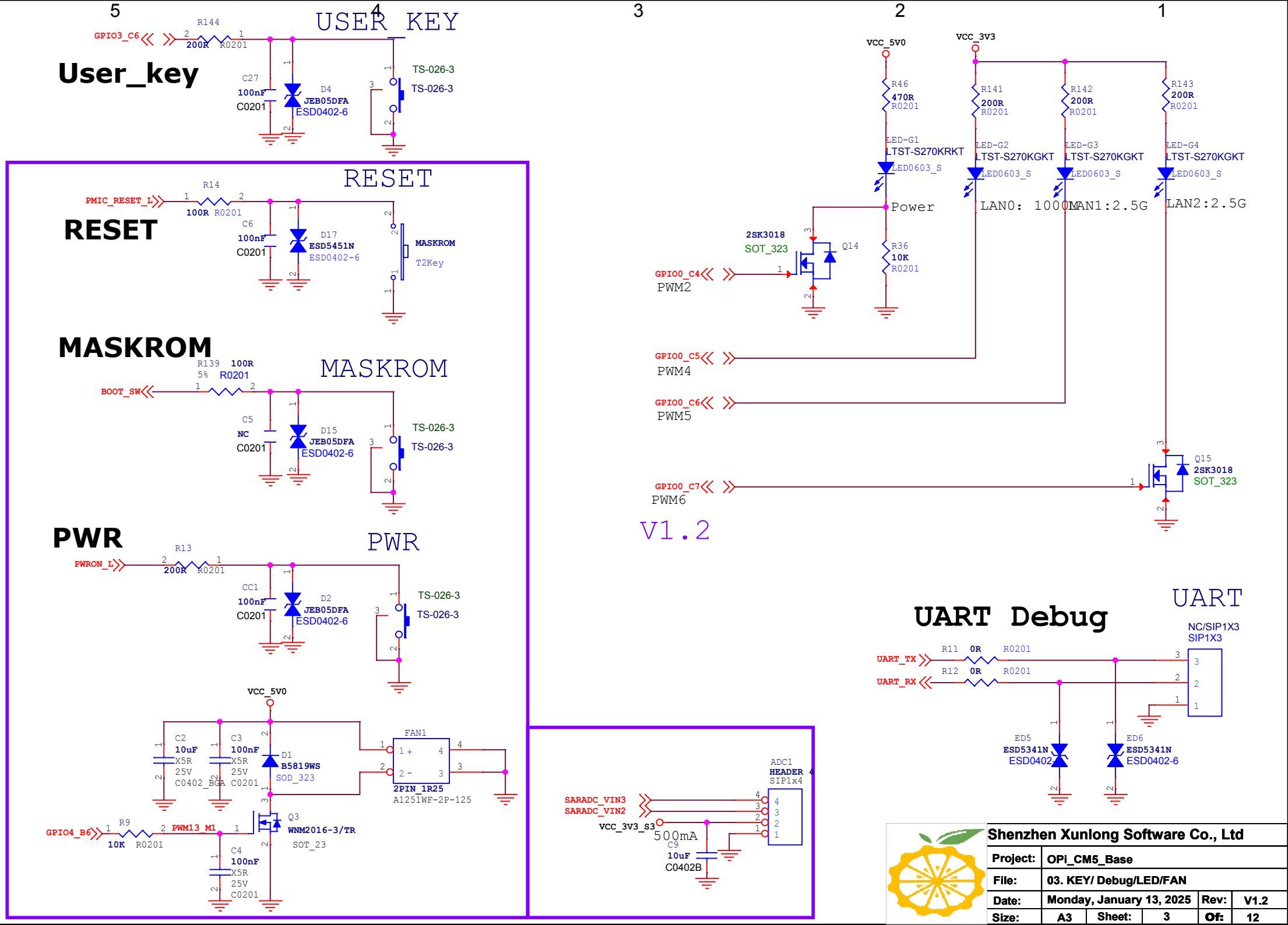
USER KEY
User_key
GPIO3_C6
R144
200R
R0201
C27
100nF
C0201
D4
JEB05DFA
ESD0402-6
TS-026-3
RESET
RESET
PMIC_RESET_L
R14
100R
R0201
C6
100nF
C0201
D17
ESD5451N
ESD0402-6
MASKROM
T2Key
MASKROM
MASKROM
BOOT_SW
R139
100R
5%
R0201
C5
NC
C0201
D15
JEB05DFA
ESD0402-6
TS-026-3
PWR
PWR
PWRON_L
R13
200R
R0201
CC1
100nF
C0201
D2
JEB05DFA
ESD0402-6
TS-026-3
VCC_5V0
C2
10uF
X5R
25V
C0402_BGA
C3
100nF
X5R
25V
C0201
D1
B5819WS
SOD_323
FAN1
2PIN_1R25
A1251WF-2P-125
GPIO4_B6
R9
10K
R0201
PWM13_M1
Q3
WNM2016-3/TR
SOT_23
C4
100nF
X5R
25V
C0201
VCC_5V0
VCC_3V3
R46
470R
R0201
R141
200R
R0201
R142
200R
R0201
R143
200R
R0201
LED-G1
LTST-S270KRKT
LED0603_S
LED-G2
LTST-S270KGKT
LED0603_S
LED-G3
LTST-S270KGKT
LED0603_S
LED-G4
LTST-S270KGKT
LED0603_S
Power
LAN0: 1000M
LAN1:2.5G
LAN2:2.5G
2SK3018
SOT_323
Q14
R36
10K
R0201
GPIO0_C4
PWM2
GPIO0_C5
PWM4
GPIO0_C6
PWM5
GPIO0_C7
PWM6
Q15
2SK3018
SOT_323
V1.2
UART
UART Debug
NC/SIP1X3
SIP1X3
UART_TX
UART_RX
R11
0R
R0201
R12
0R
R0201
ED5
ESD5341N
ESD0402
ED6
ESD5341N
ESD0402-6
ADC1
HEADER 4
SIP1x4
SARADC_VIN3
SARADC_VIN2
VCC_3V3_S3
500mA
C9
10uF
C0402B
Shenzhen Xunlong Software Co., Ltd
Project: OPi_CM5_Base
File: 03. KEY/ Debug/LED/FAN
Date: Monday, January 13, 2025
Rev: V1.2
Size: A3
Sheet: 3
Of: 12

# TF CARD

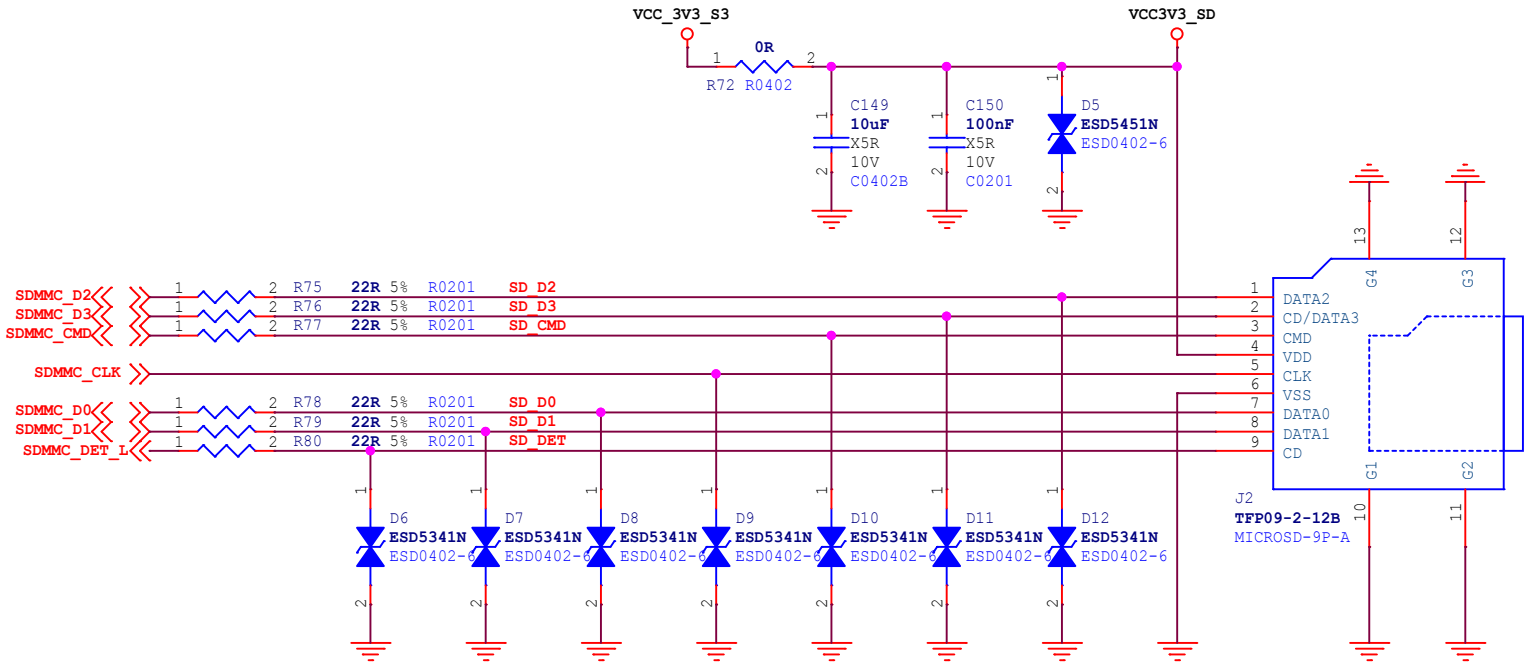


MicroSD Card

**Rockchip Confidential**

| | | | | | |
|---|---|---|---|---|---|
| Shenzhen Xunlong Software Co., Ltd | | | | | |
| Project: | OPi_CM5_Base | | | | |
| File: | 04.Flash-TF Card | | | | |
| Date: | Monday, January 13, 2025 | | | Rev: | V1.2 |
| Size: | A3 | Sheet: | 4 | Of: | 12 |

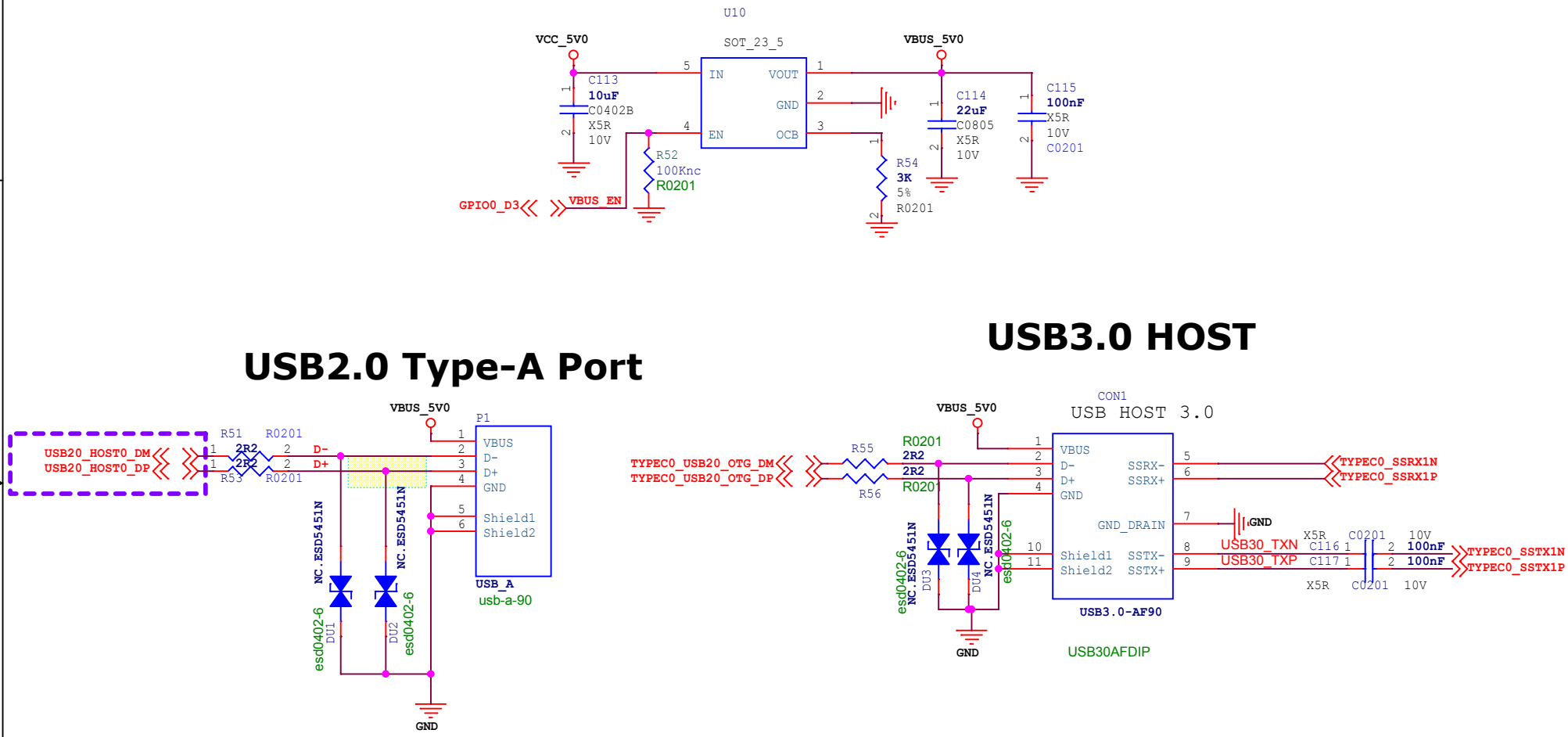


| | | | | | |
|---|---|---|---|---|---|
| Shenzhen Xunlong Software Co., Ltd | | | | | |
| Project: | OPi_CM5_Base | | | | |
| File: | 05.USB20/USB30 HOST Port | | | | |
| Date: | Monday, January 13, 2025 | | | Rev: | V1.2 |
| Size: | A3 | Sheet: | 5 | Of: | 12 |

# HDMI2.1 TX0

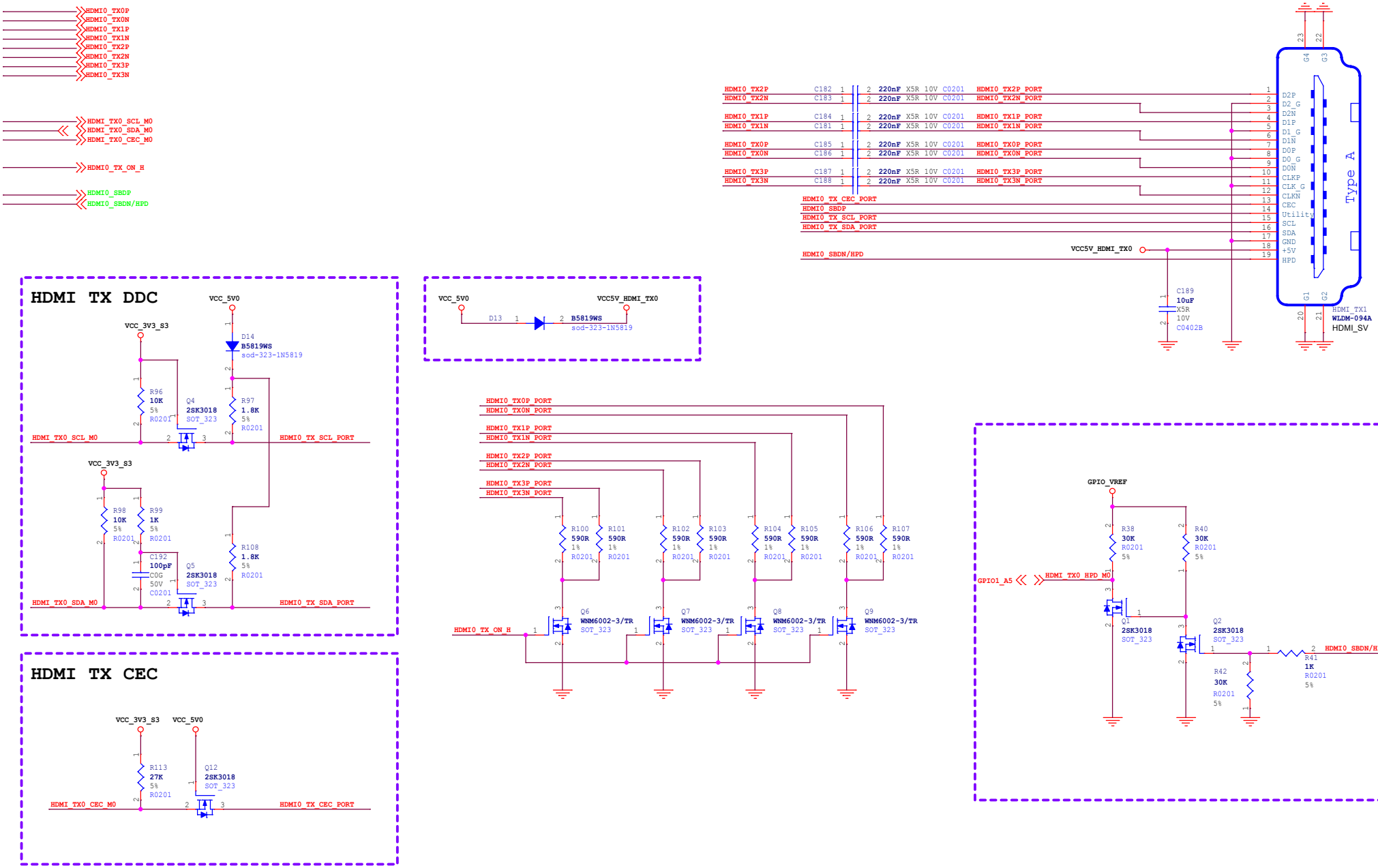


| | | | |
|---|---|---|---|
| Shenzhen Xunlong Software Co., Ltd | | | |
| Project: | OPi_CM5_Base | | |
| File: | 06.VO-HDMI2.1 TX | | |
| Date: | Monday, January 13, 2025 | Rev: | V1.2 |
| Size: A3 | Sheet: 6 | Of: | 12 |

# 10M/100M/1000M ETH

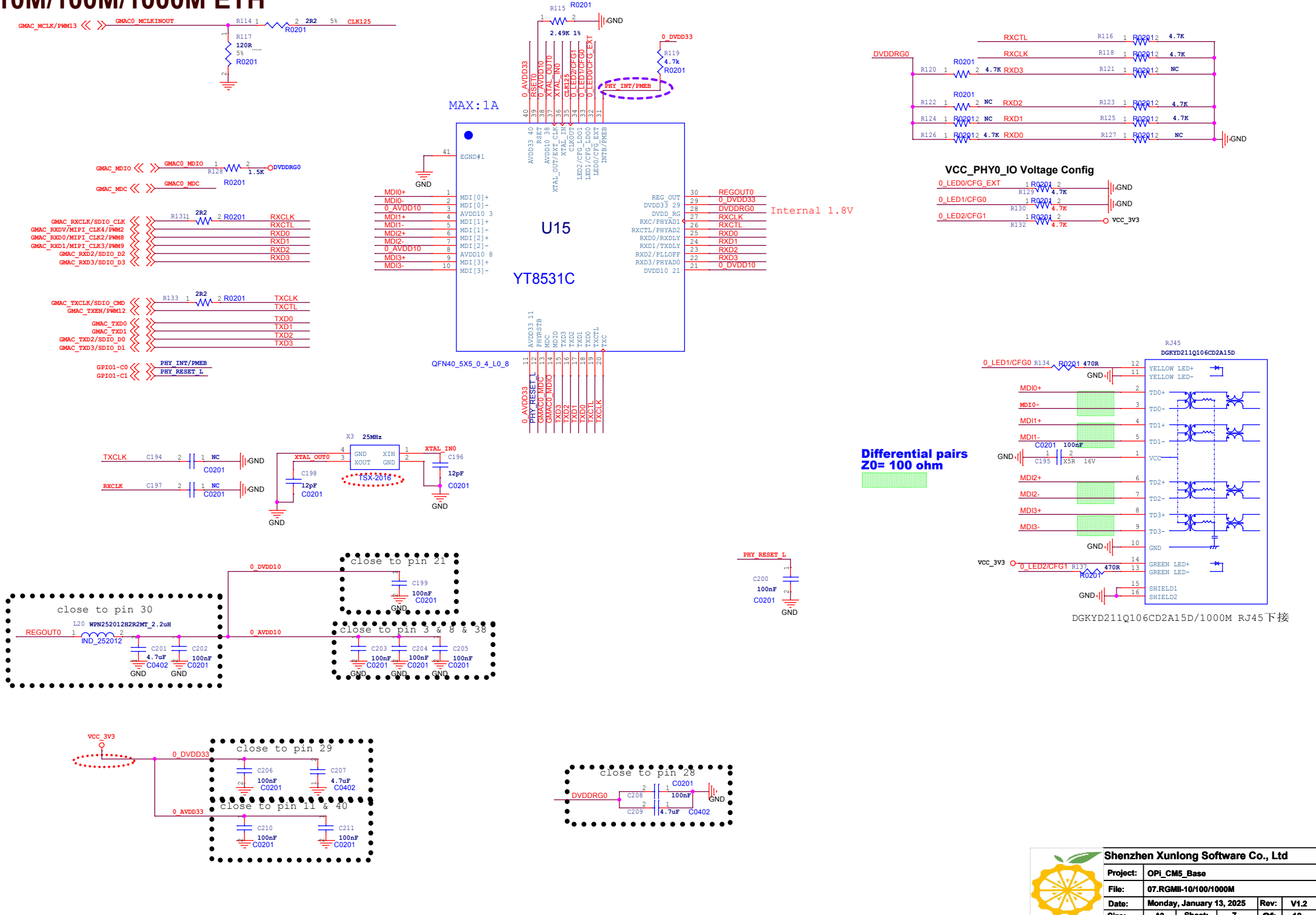


| | | | | | |
|---|---|---|---|---|---|
| Shenzhen Xunlong Software Co., Ltd | | | | | |
| Project: | OPi_CM5_Base | | | | |
| File: | 07.RGMII-10/100/1000M | | | | |
| Date: | Monday, January 13, 2025 | | | Rev: | V1.2 |
| Size: | A3 | Sheet: | 7 | Of: | 12 |

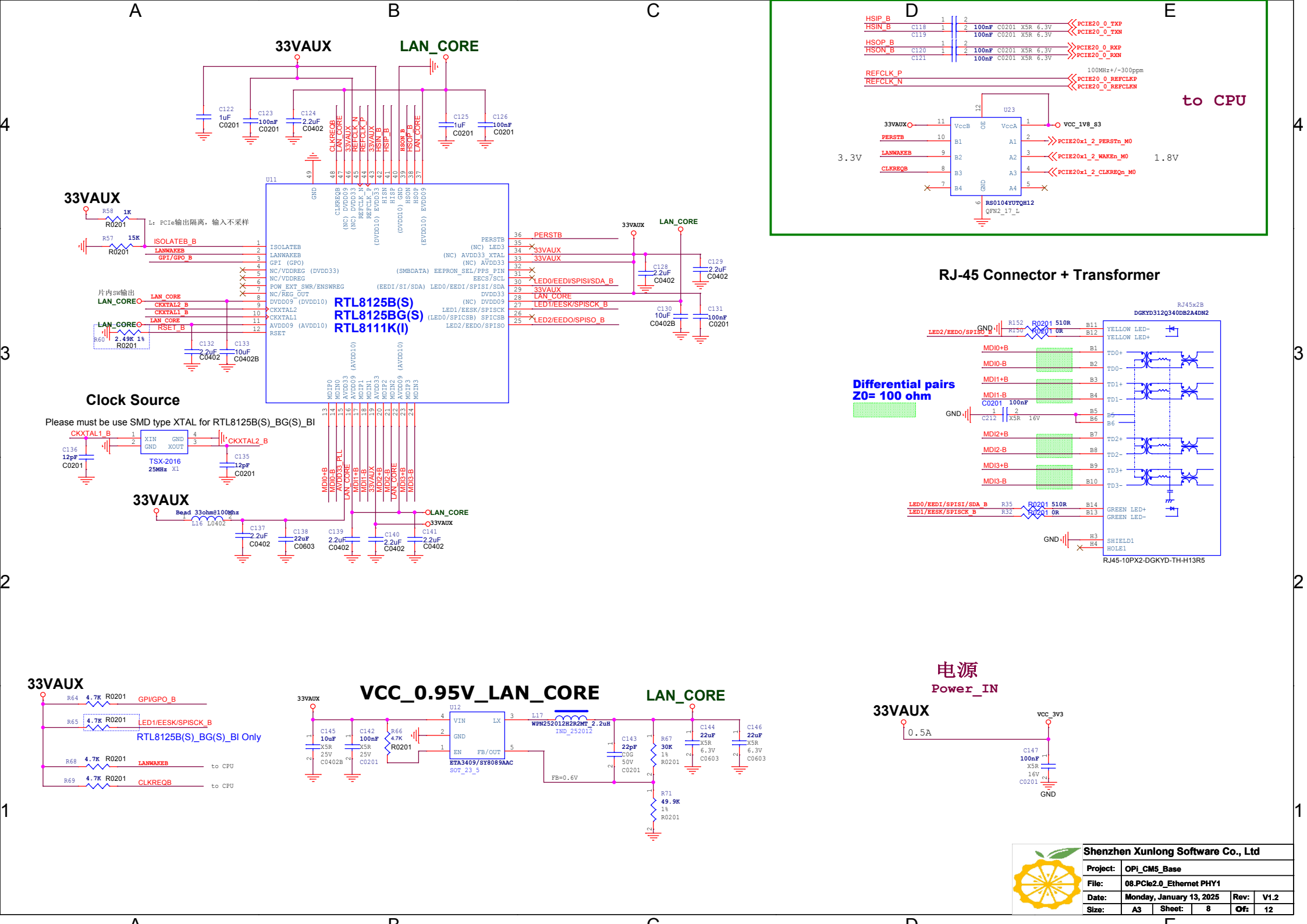
33VAUX
LAN_CORE
U11
RTL8125B(S)
RTL8125BG(S)
RTL8111K(I)
ISOLATEB_B
LANWAKEB
GPI/GPO_B
PERSTB
LED0/EEDI/SPISI/SDA_B
LED1/EESK/SPISCK_B
LED2/EEDO/SPISO_B
CKXTAL2_B
CKXTAL1_B
RSET_B
L: PCIe输出隔离，输入不采样
片内SW输出
Clock Source
Please must be use SMD type XTAL for RTL8125B(S)_BG(S)_BI
TSX-2016
25MHz X1
Bead 33ohm@100Mhz
to CPU
RJ-45 Connector + Transformer
RJ45x2B
DGKYD312Q340DB2A4DN2
Differential pairs
Z0= 100 ohm
RJ45-10PX2-DGKYD-TH-H13R5
VCC_0.95V_LAN_CORE
ETA3409/SY8089AAC
SOT_23_5
WPN252012H2R2MT_2.2uH
RTL8125B(S)_BG(S)_BI Only
电源
Power_IN
VCC_3V3
0.5A
3.3V
1.8V
RS0104YUTQH12
QFN2_17_L
Shenzhen Xunlong Software Co., Ltd
Project: OPi_CM5_Base
File: 08.PCIe2.0_Ethernet PHY1
Date: Monday, January 13, 2025
Rev: V1.2
Size: A3
Sheet: 8
Of: 12

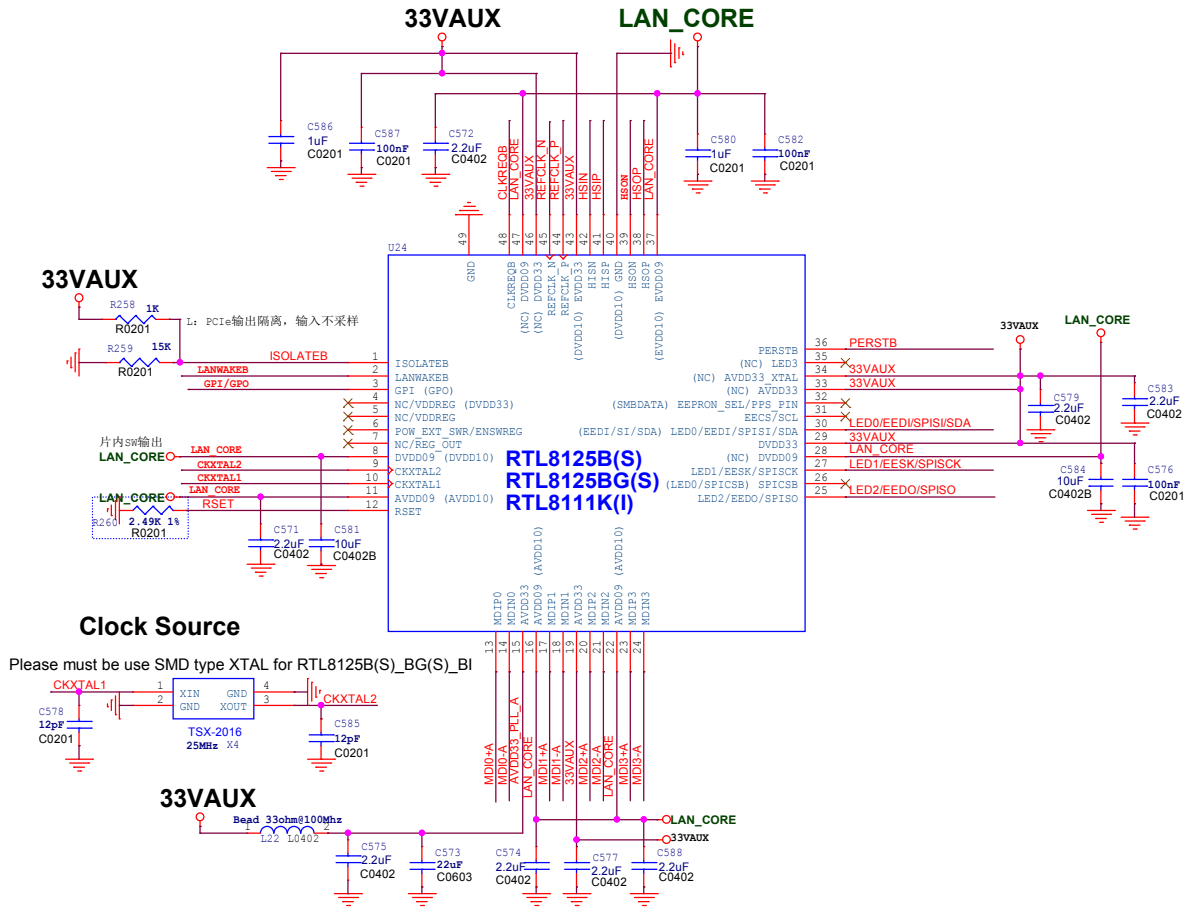


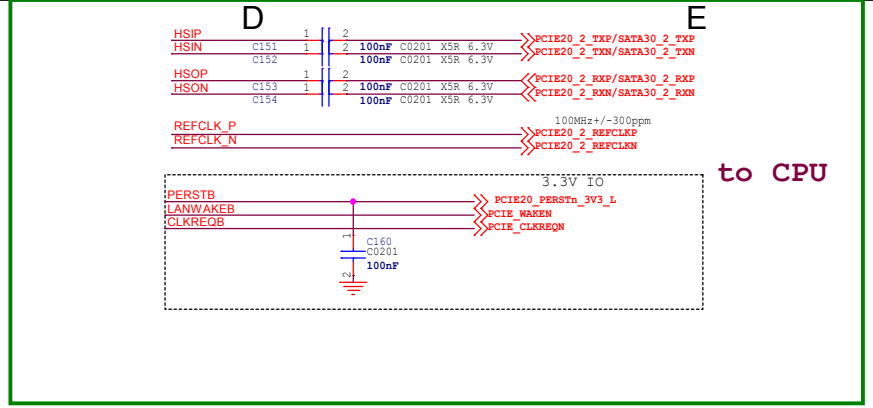


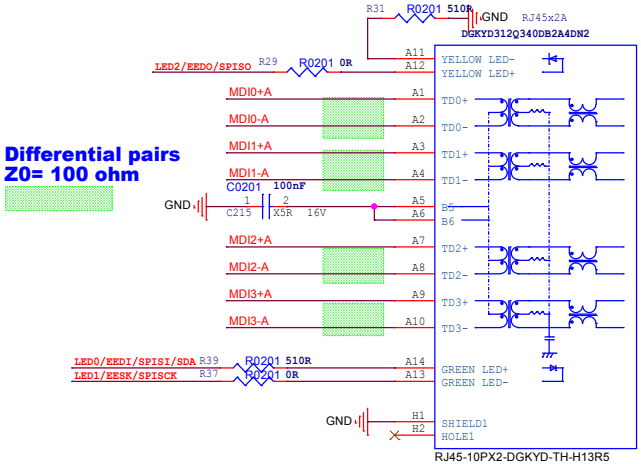


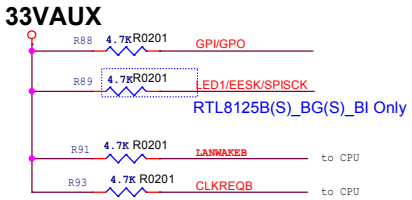


| Shenzhen Xunlong Software Co., Ltd | | | | |
|---|---|---|---|---|
| Project: | OPi_CM5_Base | | | |
| File: | 09.PCIe2.0_Ethernet PHY2 | | | |
| Date: | Monday, January 13, 2025 | | Rev: | V1.2 |
| Size: | A3 | Sheet: 9 | Of: | 12 |

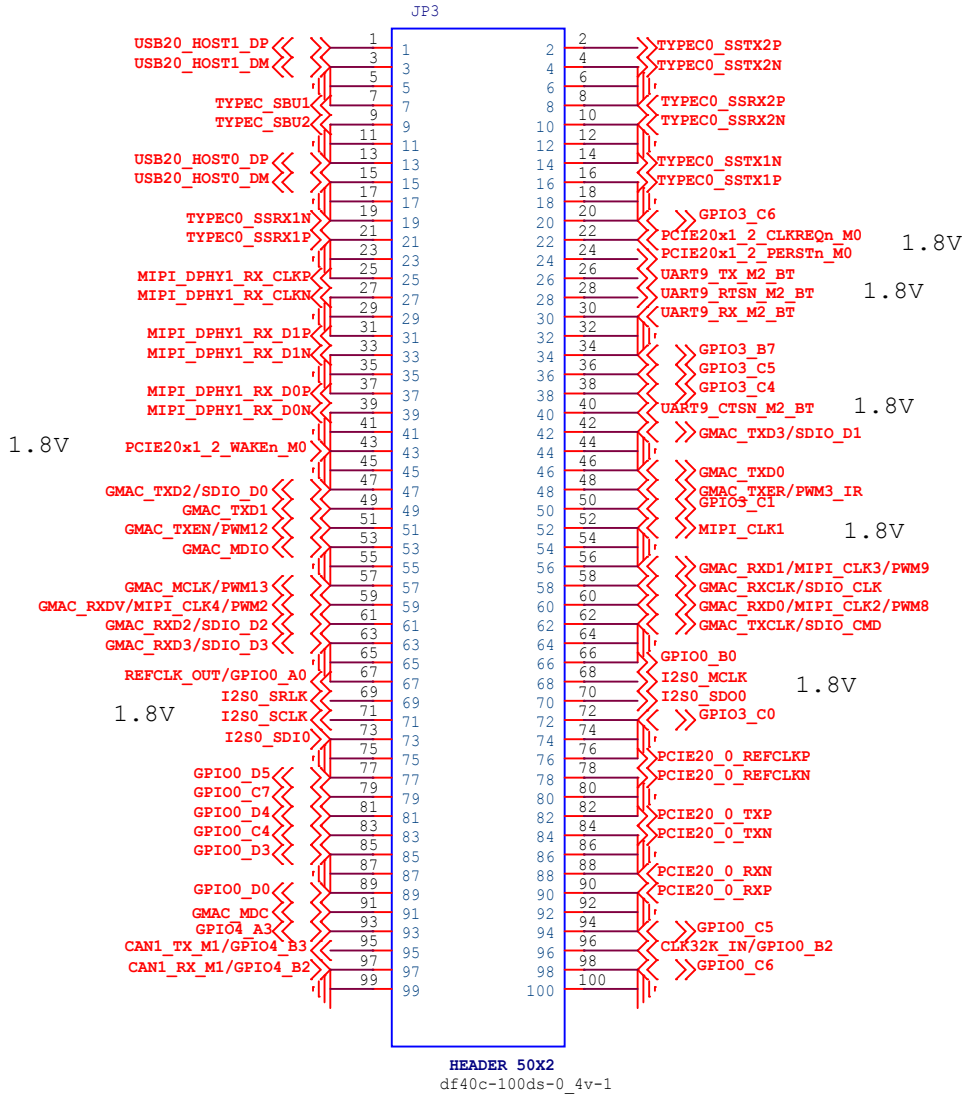


GPIO0_**:1.8V

GPIO1_C0、C1、C4、C6、D0-D3、D5:: GPIO_VREF

GPIO1_A*、B*: GPIO_VREF

GPIO_VREF: 3.3V

GPIO3_**:1.8V

GPIO4_**:3.3V

GMAC:1.8V

I2S0:1.8V

| | | | | | |
|---|---|---|---|---|---|
| Shenzhen Xunlong Software Co., Ltd | | | | | |
| Project: | OPi_CM5_Base | | | | |
| File: | 10.CON_JP3 | | | | |
| Date: | Monday, January 13, 2025 | | | Rev: | V1.2 |
| Size: | A3 | Sheet: | 10 | Of: | 12 |

# MIPI-CSI0_RX

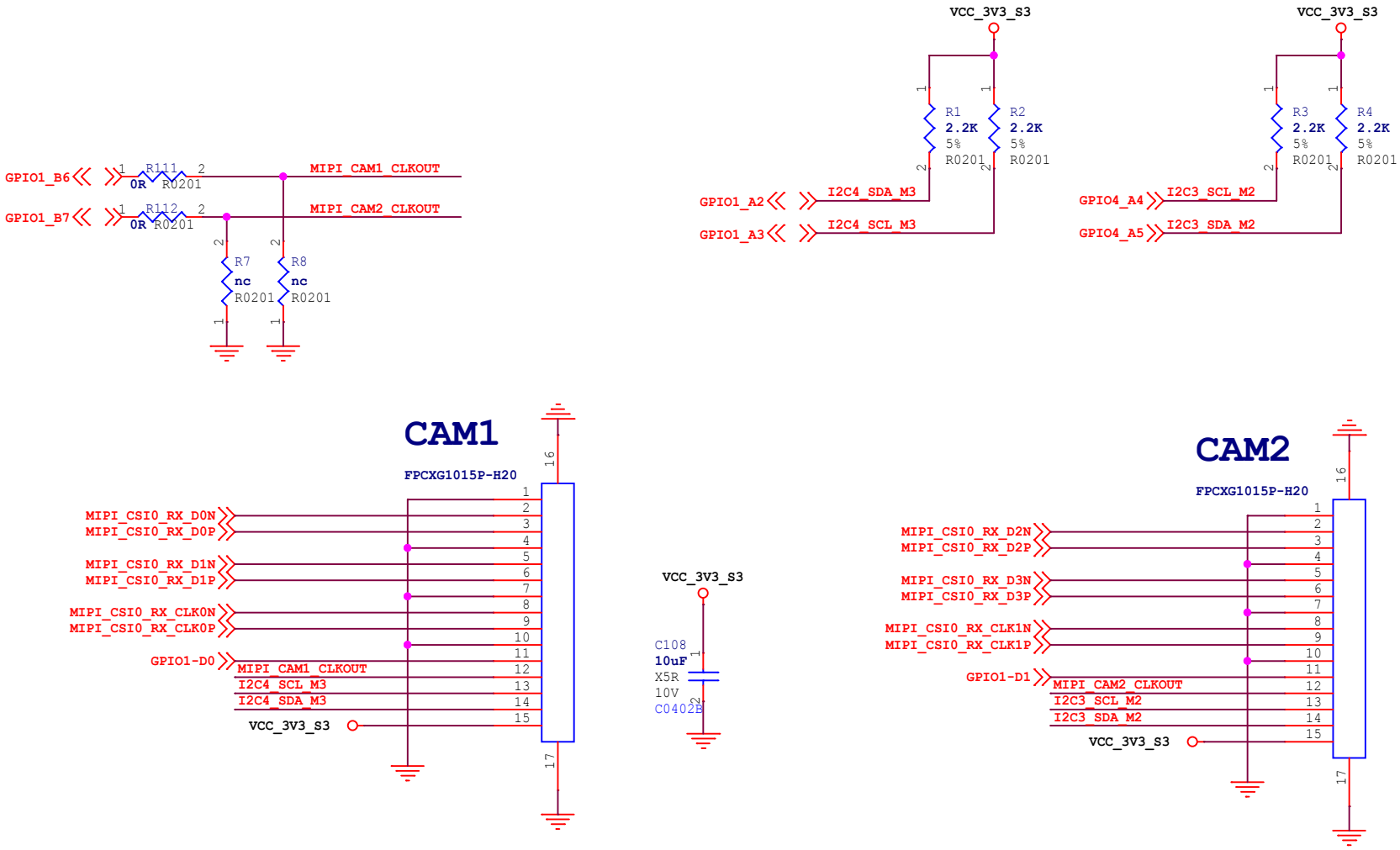


| | | | | | |
|---|---|---|---|---|---|
| Shenzhen Xunlong Software Co., Ltd | | | | | |
| Project: | OPi_CM5_Base | | | | |
| File: | 11.VI-Cam MIPI CSI | | | | |
| Date: | Monday, January 13, 2025 | | | Rev: | V1.2 |
| Size: | A3 | Sheet: | 11 | Of: | 12 |

# VI-Camera DPHY1_RX

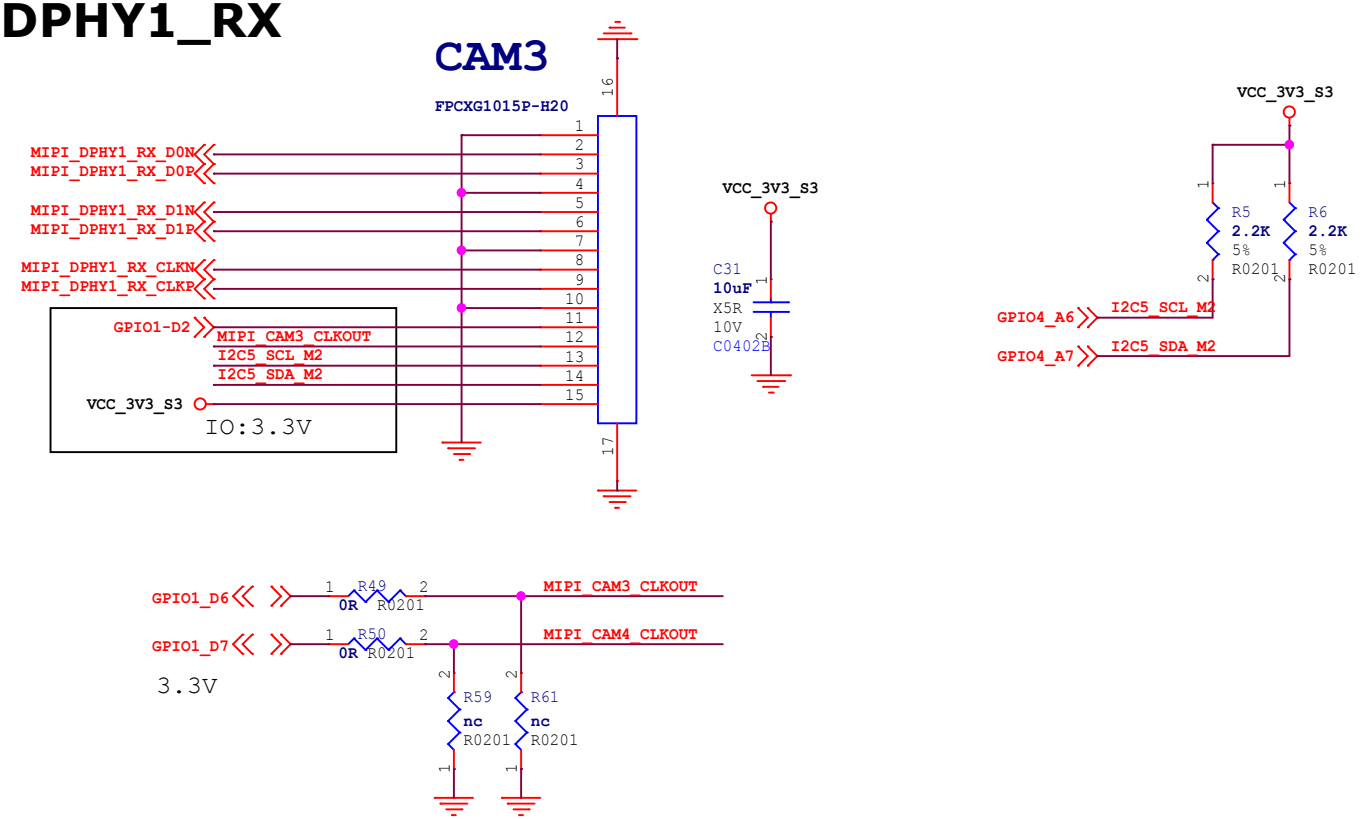


# VI-Camera DPHY0_RX

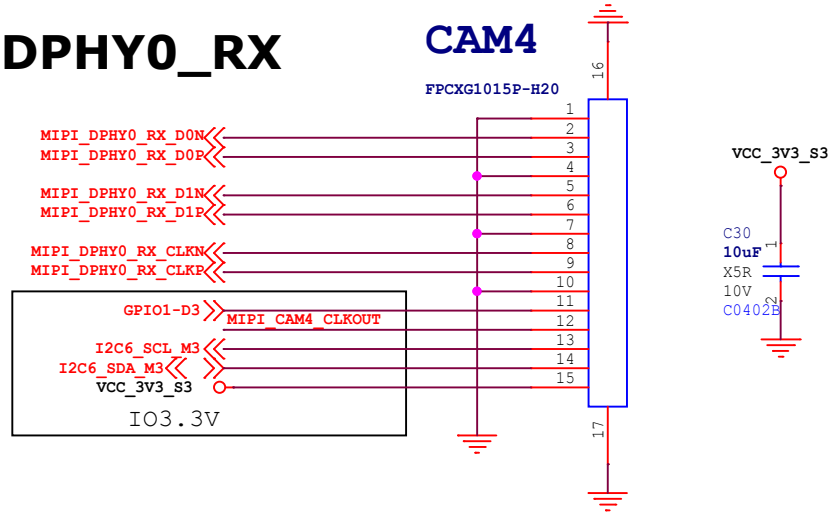


| | | | | | |
|---|---|---|---|---|---|
| Shenzhen Xunlong Software Co., Ltd | | | | | |
| Project: | OPi_CM5_Base | | | | |
| File: | 12.VI-Cam MIPI-DPHY | | | | |
| Date: | Monday, January 13, 2025 | | | Rev: | V1.2 |
| Size: | A3 | Sheet: | 12 | Of: | 12 |